www.motomobil.com

**Important Notes**

This is a factory "engineered" set cam and crank timing gears. They have been carefully "matched" for the correct backlash setting, inspected and boxed as a unit. Install as a unit for maximum performance.

Any change in center distance eg due to worn out bearings will cause a noisy gear operation. Any undue hammering of either gear body or tooth shoulder will cause teeth to flare out, creating a noisy gear operation.

When press-fit, the wheels have to be forced on the shaft with an suitable hammering sleeve; additionally it is recommended to warm up the wheels in hot oil bath before assembly ("shrinking"). Disassembly must be executed with suitable pullers.

## INSTALLATION GUIDE ALLOY & STEEL TIMING GEARS

Important product information

For engines, which were original equipped with a Pertinax camshaft gear, the screws of the camshaft fixing plate must be used without the locking washers and should be fixed with Loctite. Please check always the clearance between the gear and the screws.

The installation of the supplied timing gears should take place only by experienced and qualified technical personnel
The timing gears must not be hammered on to the shaft. The damage of the timing gears and the respective shaft can be
the consequence.
The timing gears "are lightly struck" with a synthetic material hammer and are "wound up" with the original screw.
Pay attention to the correct standing of the spot-marks on each timing gear
The prescribed locking torques must be maintained
The mechanical sounds to be heard at the time of the installation, "sewing machines sound ", decrease after approx. 100km and should disappear after a run performance of approx. 500 km to 90%.
The oil circuit may not be interrupted in any case. In particular pay attention to a free lubrication of the timing gears
(see attachment)
The balance shaft bearings and the balance shaft itself must be in faultless condition

ENGINE OIL CIRCUIT

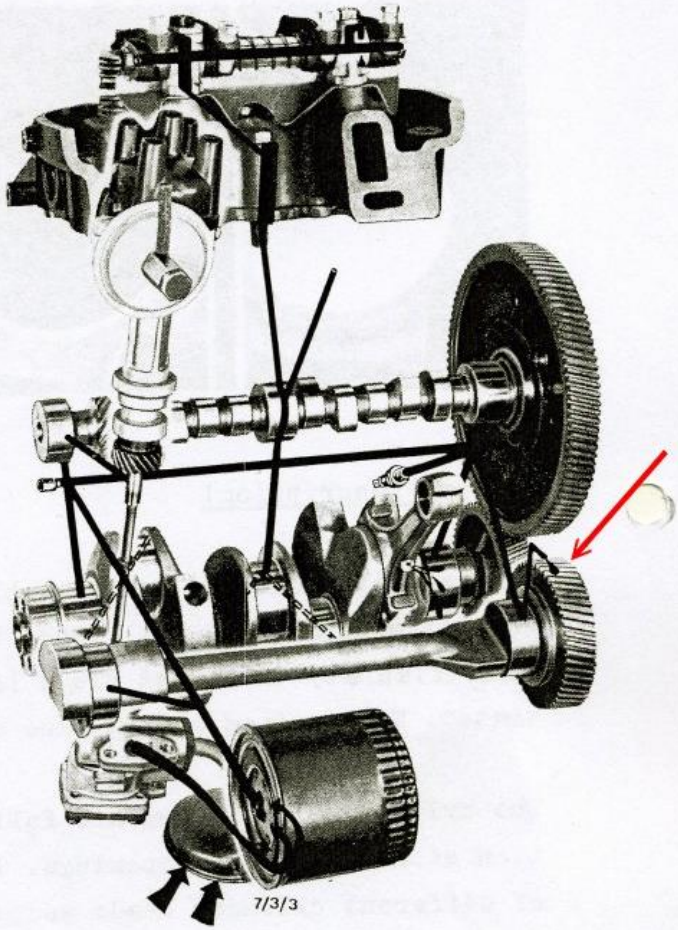


The engine's oil pump draws the oil from the oil pan through a screen and pumps it under pressure via the full-flow oil filter into the main oil gallery and through a separate bore to the balance shaft rear bearing. The main oil gallery in cylinder block is at its rear end closed by a screw plug and at its front end by the camshaft thrust plate. The three crankshaft and camshaft bearings, the front balance shaft bearing and the oil pressure switch are in direct connection with the main oil gallery. Each crankshaft connecting rod journal is supplied with oil from the nearest crankshaft main bearing via slanting passages. The big ends of the connecting rods have each a squirt hole facing the thrust side of the pistons. The balance shaft front bearing journal is in the middle provided with a radial slot equivalent in length to 3/4 of the journal's circumference, via which the squirt hole for the timing gears is pulsatingly supplied with oil. The center camshaft bearing journal is around its entire circumference provided with an oil groove, from which oil is forced through two passages in the cylinder block to the left and right rocker shaft.